GOOD-ARK SEMICONDUCTOR

GSFV15002

1500V N-Channel MOSFET

Main Product Characteristics

V_{DS}	1500V
$R_{DS(ON)}$	10Ω (max.)
I_D	2.5A

TO-3PF

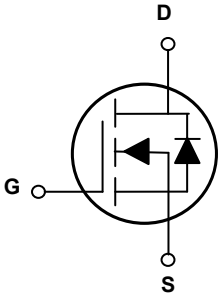

Schematic Diagram

Features and Benefits

- Advanced MOSFET process technology
- Ideal for high efficiency switched mode power supplies
- Low on-resistance with low gate charge
- Fast switching and reverse body recovery

Description

The GSFV15002 utilizes the latest techniques to achieve high cell density and low on-resistance. These features make this device extremely efficient and reliable for use in high efficiency switch mode power supply and a wide variety of other applications.

Absolute Maximum Ratings (T_C=25°C unless otherwise specified

Parameter	Symbol	Value	Unit
Drain-Source Voltage	V_{DS}	1500	V
Gate-Source Voltage	V_{GS}	±30	V
Continuous Drain Current at Tc=25°C	$I_{D\ (DC)}$	2.5	A
Continuous Drain Current at Tc=100°C	$I_{D\ (DC)}$	1.6	A
Pulsed Drain Current[1]	$I_{DM\ (pluse)}$	10	A
Maximum Power Dissipation (Tc=25°C)	P_D	100	W
Power Dissipation-Derate Above 25°C		0.8	W/°C
Single Pulse Avalanche Energy[2]	E_{AS}	36.5	mJ
Avalanche Current[2]	I_{AS}	2.7	A
Thermal Resistance，Junction-to-Case (Maximum)	$R_{\theta JC}$	1.25	°C/W
Thermal Resistance，Junction-to-Ambient (Maximum)	$R_{\theta JA}$	62	°C/W
Operating Junction Temperature Range	T_J	-55 to +150	°C
Storage Temperature Range	T_{STG}	-55 to +150	°C

Electrical Characteristics (T_J=25°C unless otherwise specified)

Parameter	Symbol	Condition	Min	Typ	Max	Unit
On/off States						
Drain-Source Breakdown Voltage	BV_{DSS}	V_{GS}=0V, I_D=250μA	1500	-	-	V
Zero Gate Voltage Drain Current(Tc=25°C)	I_{DSS}	V_{DS}=1200V, V_{GS}=0V	-	-	1	μA
Zero Gate Voltage Drain Current(Tc=85°C)	I_{DSS}	V_{DS}=960V, V_{GS}=0V	-	-	10	μA
Gate-Source Leakage Current	I_{GSS}	V_{GS}=±30V, V_{DS}=0V	-	-	±100	nA
Gate Threshold Voltage	$V_{GS(th)}$	V_{DS}=V_{GS}, I_D=250μA	2	3.2	5	V
Drain-Source On-State Resistance	$R_{DS(ON)}$	V_{GS}=10V, I_D=2A	-	7	10	Ω
Forward Transconductance	gfs	V_{DS}=10V I_D=1A	-	1	-	S
Gate Resistance	Rg	VGS=0V,V_{DS}=0V,F=1.0MHz	-	5.6	-	Ω
Dynamic Characteristics						
Input Capacitance	C_{Iss}	V_{DS}=100V, V_{GS}=0V, F=1.0MHz	-	1150	2300	pF
Output Capacitance	C_{oss}		-	50	100	pF
Reverse Transfer Capacitance	C_{rss}		-	23	46	pF
Total Gate Charge[3,4]	Q_g	V_{DS}=100V, I_D=1A, V_{GS}=10V	-	41	82	nC
Gate-Source Charge[3,4]	Q_{gs}		-	12	24	nC
Gate-Drain Charge[3,4]	Q_{gd}		-	12.4	25	nC
Switching Times						
Turn-on Delay Time[3,4]	$t_{d(on)}$	V_{DD}=100V, I_D=1A, R_G=6Ω, V_{GS}=10V	-	38	70	nS
Turn-on Rise Time[3,4]	t_r		-	32	65	nS
Turn-Off Delay Time[3,4]	$t_{d(off)}$		-	48	95	nS
Turn-Off Fall Time[3,4]	t_f		-	45	90	nS
Source- Drain Diode Characteristics						
Source-Drain Current(Body Diode)	I_S	V_D=V_G=0V,Force Current	-	-	2.5	A
Pulsed Source-Drain Current(Body Diode)	I_{SM}		-	-	5.0	A
Forward On Voltage	V_{SD}	T_J=25°C, I_S=1A, V_{GS}=0V	-	-	1.0	V
Reverse Recovery Time	t_{rr}	T_J=25°C, I_S=I_F=2A, di/dt=100A/μS	-	1.83	-	uS
Reverse Recovery Charge	Q_{rr}		-	48.7	-	uC

Notes:

1. Repetitive Rating: Pulse width limited by maximum junction temperature.
2. V_{DD}=100V,V_{GS}=10V,L=10mH,I_{AS}=2.7A.,R_G=25 ,Starting T_J=25℃.
3. The data tested by pulsed , pulse width ≦ 300us , duty cycle ≦ 2%.
4. Essentially independent of operating temperature.

Typical Electrical and Thermal Characteristic Curves

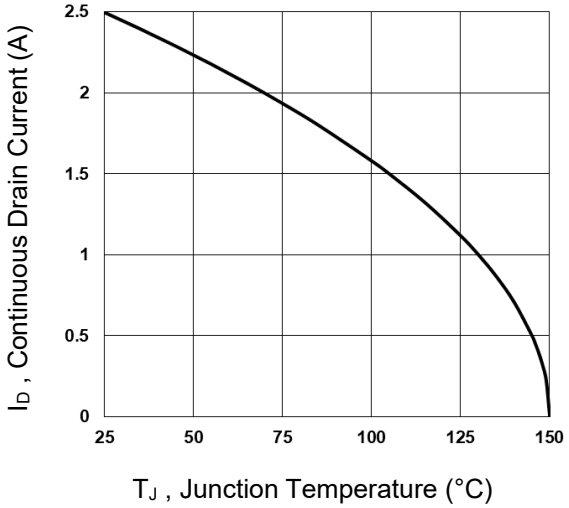

Fig.1 Continuous Drain Current vs. T_J

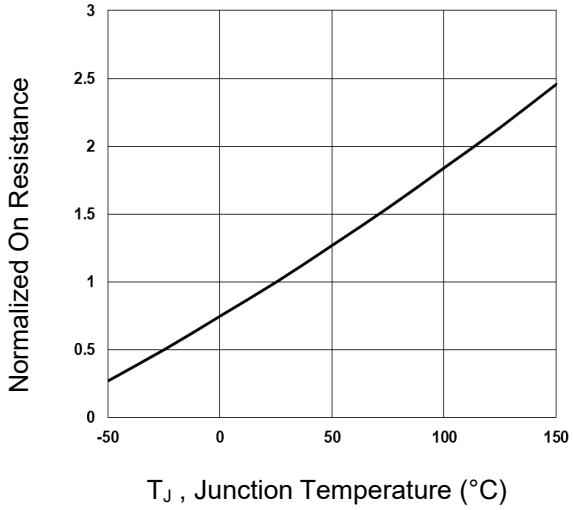

Fig.2 Normalized $R_{DS(ON)}$ vs. T_J

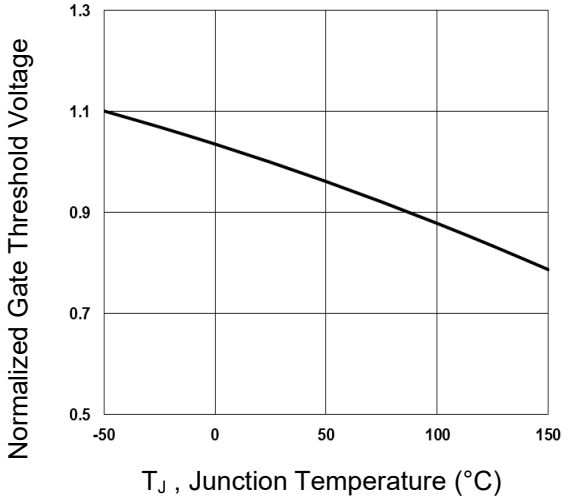

Fig.3 Normalized V_{th} vs. T_J

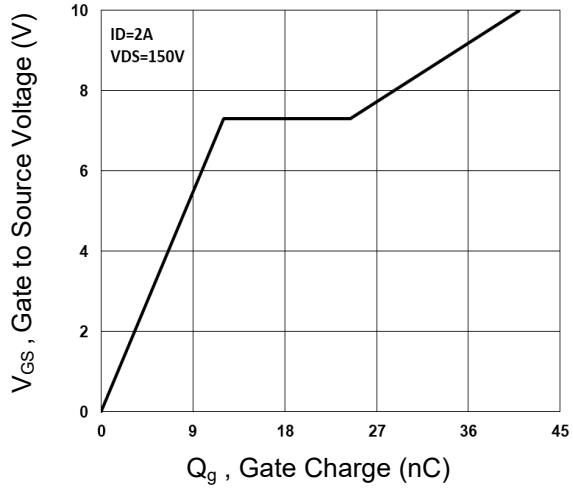

Fig.4 Gate Charge Characteristics

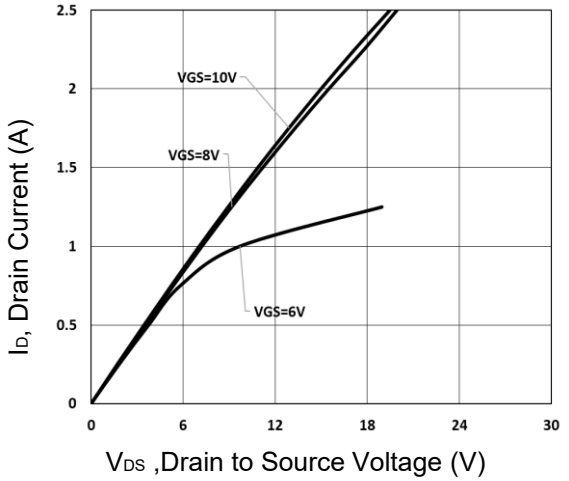

Fig.5 Typical Output Characteristics

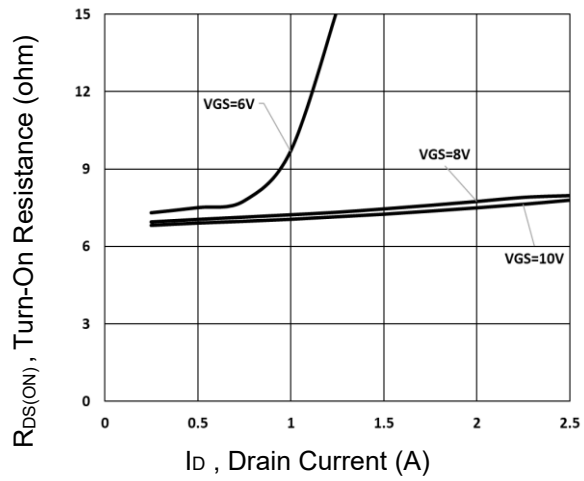

Fig.6 Turn-On Reistance vs. I_D

Typical Electrical and Thermal Characteristic Curves

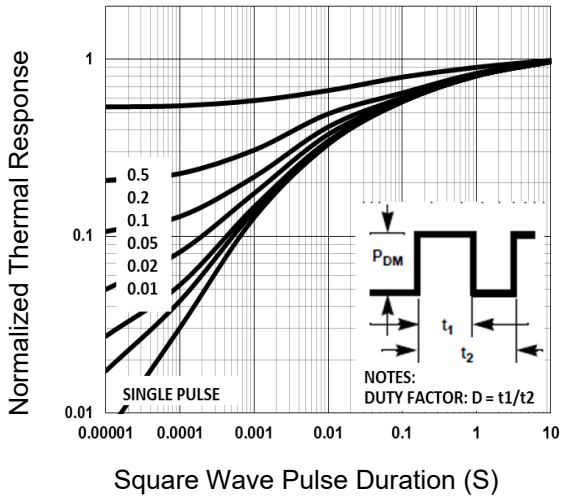

Fig.7 Normalized Transient Impedance

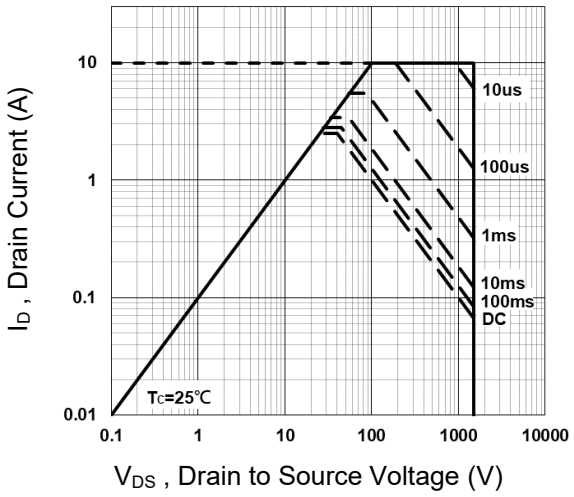

Fig.8 Maximum Safe Operation Area

Test Circuits & Waveforms

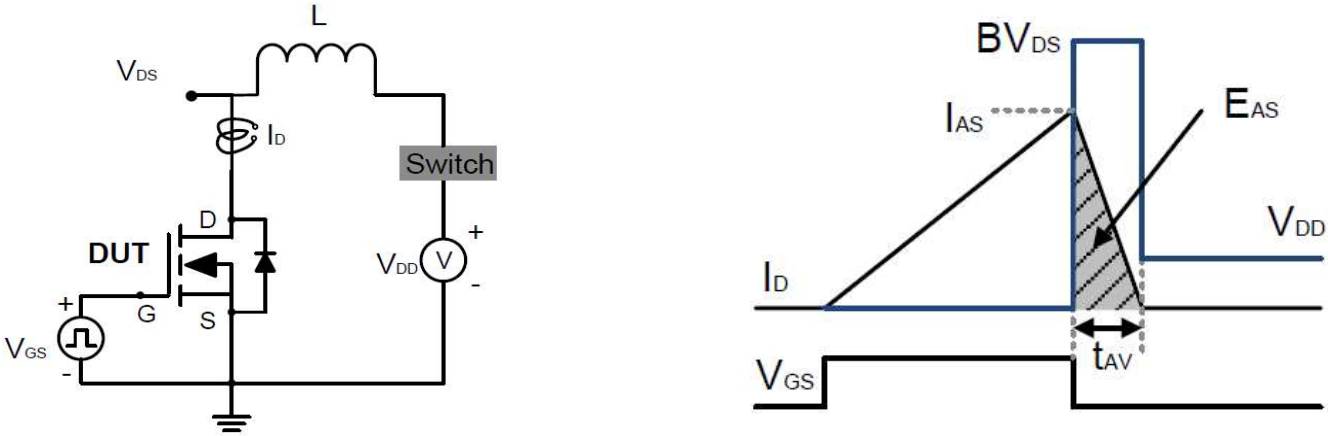

Firgure 9. E_{AS} Test Circuit and waveforms

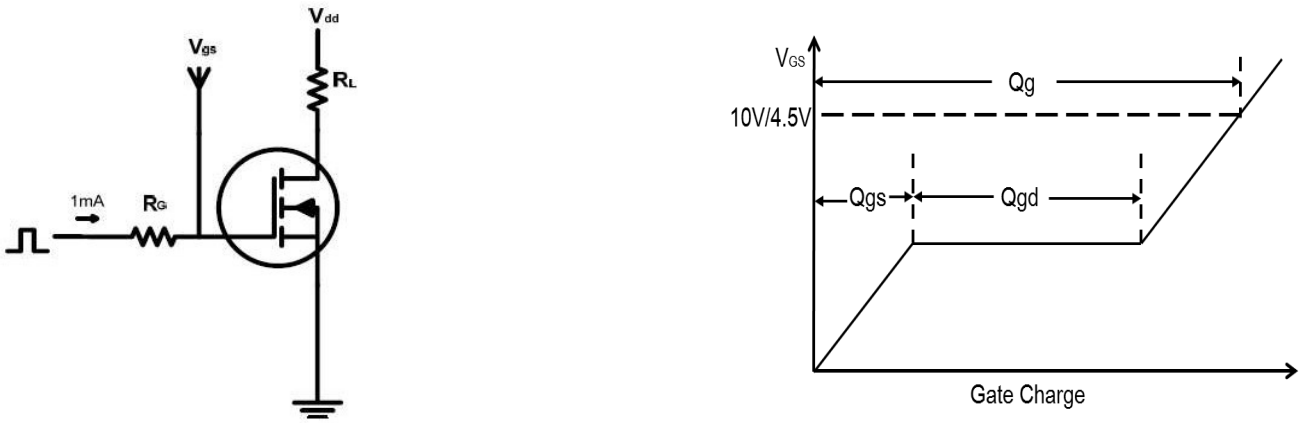

Firgure 10. Gate Charge Test Circuit and waveforms

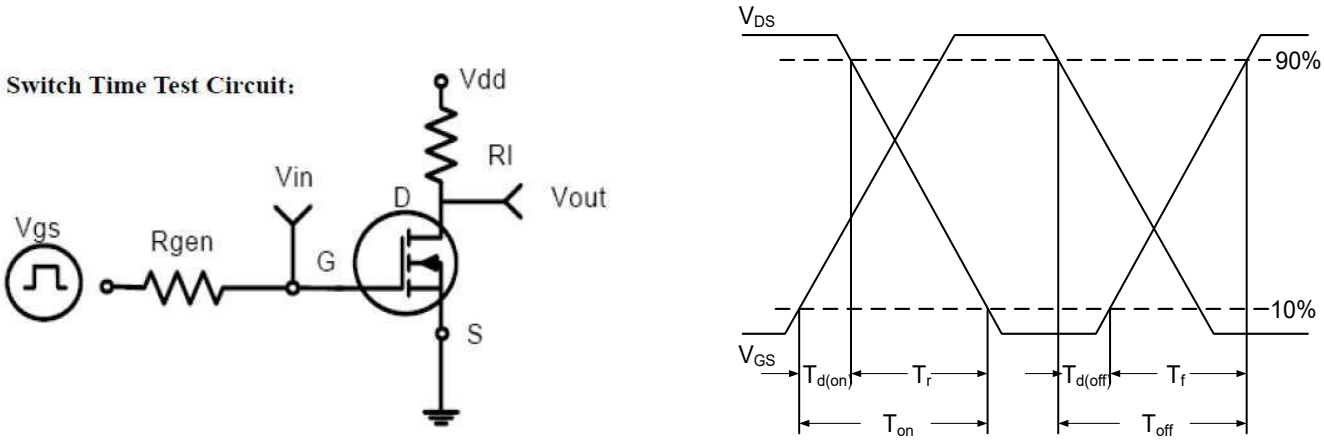

Firgure 11. Switch Time Test Circuit and waveforms

Package Outline Dimensions TO-3PF

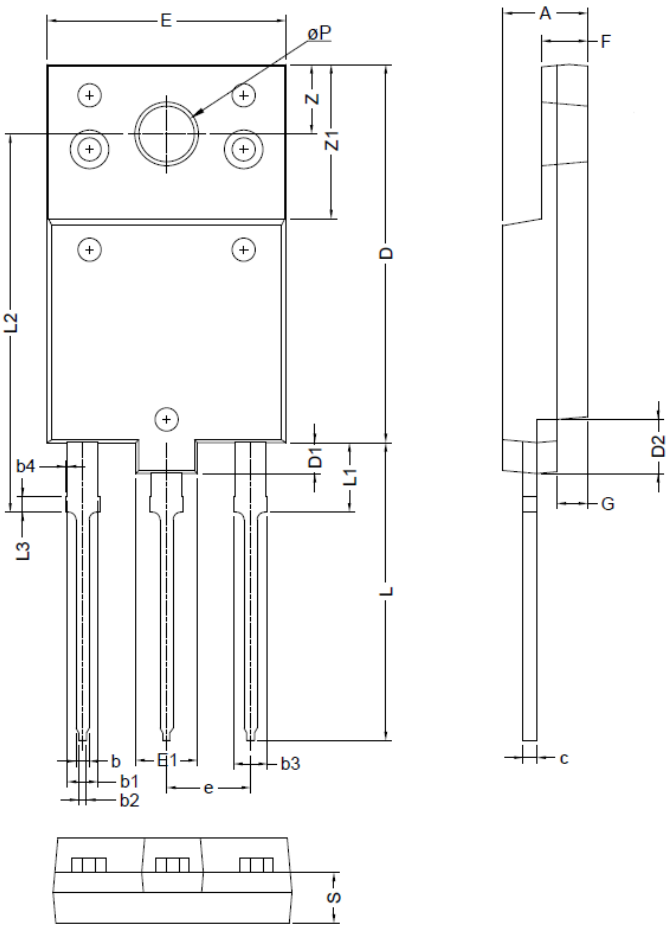

Symbol	Dimensions In Millimeters	
	MAX	MIN
A	5.30	5.70
b	0.65	0.95
b1	1.81	2.19
b2	0.30	0.70
b3	1.81	2.40
b4	-	0.20
C	0.80	1.10
D	24.20	24.80
D1	1.80	2.20
D2	3.30	3.70
E	15.20	15.80
E1	3.80	4.20
F	2.80	3.20
e	5.45 BSC	
L	19.00	19.60
L1	4.20	4.80
L2	24.20	24.80
L3	0.90	1.10
P	3.40	3.80
Z	4.30	4.70
Z1	9.70	10.30
G	1.80	2.20
S	3.10	3.50