GOOD-ARK SEMICONDUCTOR

GSFU8008

800V N-Channel MOSFET

Main Product Characteristics

$V_{(BR)DSS}$	800V
$R_{DS(ON)}$	1.56Ω
I_D	8A

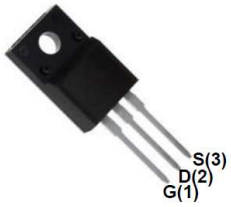

TO-220F

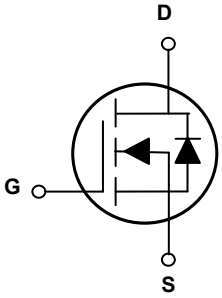

Schematic Diagram

Features and Benefits

- Advanced MOSFET process technology
- Ideal for high efficiency switched mode power supplies
- Low on-resistance with low gate charge
- Fast switching and reverse body recovery

Description

The GSFU8008 utilizes the latest techniques to achieve high cell density and low on-resistance. These features make this device extremely efficient and reliable for use in high efficiency switch mode power supply and a wide variety of other applications.

Absolute Maximum Ratings (T_C=25°C unless otherwise specified)

Parameter	Symbol	Max.	Unit
Drain-Source Voltage	V_{DS}	800	V
Gate-to-Source Voltage	V_{GS}	± 30	V
Continuous Drain Current, V_{GS} @ 10V [1]	I_D @ T_C = 25°C	8	A
Continuous Drain Current, V_{GS} @ 10V [1]	I_D @ T_C = 100°C	5.1	A
Pulsed Drain Current [2]	I_{DM}	32	A
Single Pulse Avalanche Energy @ L=25mH	E_{AS}	760	mJ
Avalanche Current@ L=25mH	I_{AS}	7.8	A
Power Dissipation [3]	P_D @T_C = 25°C	59	W
Linear Derating Factor	$R_{\theta JC}$	0.48	W/°C
Junction-to-Case[3]		2.1	°C/W
Junction-to-Ambient (t ≤ 10s) [4]	$R_{\theta JA}$	62.5	°C/W
Junction-to-Ambient (PCB Mounted, Steady-State) [4]		40	°C/W
Operating Junction and Storage Temperature Range	T_J T_{STG}	-55 to + 150	°C

Electrical Characteristics (T_C=25°C unless otherwise specified)

Parameter	Symbol	Conditions	Min.	Typ.	Max.	Unit
Drain-to-Source Breakdown Voltage	$V_{(BR)DSS}$	V_{GS} = 0V, I_D = 250μA	800	-	—	V
Drain-to-Source Leakage Current	I_{DSS}	V_{DS} = 800V, V_{GS} = 0V	-	-	1	μA
		T_J = 125°C	-	-	50	
Gate-to-Source Forward Leakage	I_{GSS}	V_{GS} =30V	-	-	100	nA
		V_{GS} = -30V	-	-	-100	
Static Drain-to-Source On-Resistance	$R_{DS(on)}$	V_{GS}=10V, I_D = 3.5A	-	1.32	1.56	Ω
		T_J = 125°C	-	2.38	-	
Gate Threshold Voltage	$V_{GS(th)}$	V_{DS} = V_{GS}, I_D = 250μA	2	3	4	V
		T_J = 125°C	-	1.93	-	
Input Capacitance	C_{iss}	V_{GS} = 0V V_{DS} = 25V *f* = 1MHz	-	1106	-	pF
Output Capacitance	C_{oss}		-	121	-	
Reverse transfer capacitance	C_{rss}		-	5.2	-	
Total Gate Charge	Q_g	I_D = 8A, V_{DS}=400V, V_{GS} = 10V	-	24	-	nC
Gate-to-Source Charge	Q_{gs}		-	7.2	-	
Gate-to-Drain("Miller") Charge	Q_{gd}		-	9.7	-	
Turn-on Delay Time	$t_{d(on)}$	V_{GS}=10V, V_{DS}=400V, R_L=50Ω, R_{GEN}=25Ω I_D=8A	-	20	-	nS
Rise Time	t_r		-	37	-	
Turn-Off Delay Time	$t_{d(off)}$		-	59	-	
Fall Time	t_f		-	36	-	

Source-Drain Ratings and Characteristics

Parameter	Symbol	Conditions	Min.	Typ.	Max.	Unit
Continuous Source Current (Body Diode)	I_S	MOSFET symbol showing the integral reverse p-n junction diode.	-	-	8	A
Pulsed Source Current (Body Diode)	I_{SM}		-	-	32	A
Diode Forward Voltage	V_{SD}	I_S=8A, V_{GS}=0V	-	0.74	1.4	V
Reverse Recovery Time	t_{rr}	T_J = 25°C, I_F =8A d_i/d_t=100A/μs	-	968	-	ns
Reverse Recovery Charge	Q_{rr}		-	5456	-	nC

Notes

1. Calculated continuous current based on maximum allowable junction temperature.
2. Repetitive rating; pulse width limited by max. junction temperature.
3. The power dissipation P_D is based on max. junction temperature, using junction-to-case thermal resistance.
4. The value of $R_{\theta JA}$ is measured with the device mounted on 1 in 2 FR-4 board with 2oz. Copper, in a still air environment with T_A=25°C

Typical Electrical and Thermal Characteristic Curves

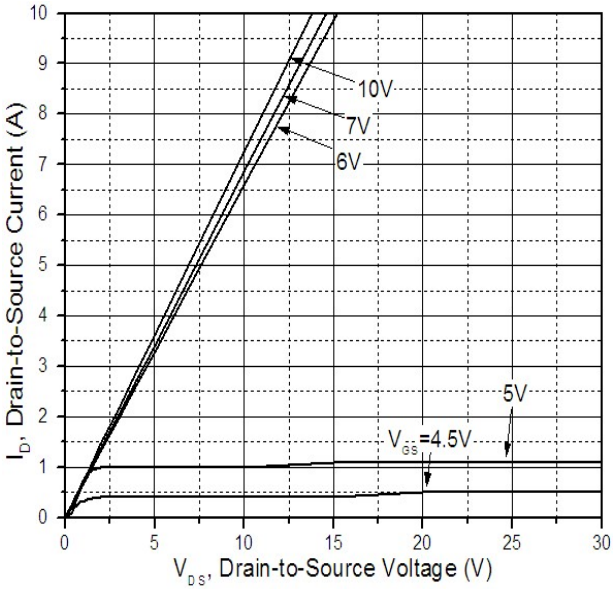

Figure 1. Typical Output Characteristics

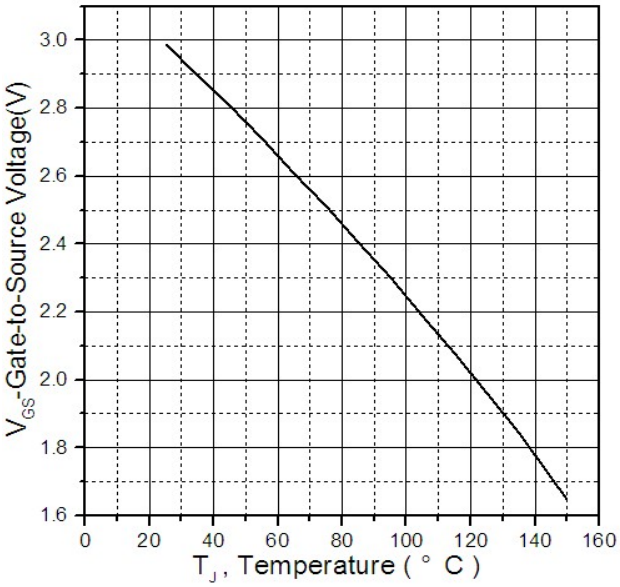

Figure 2. Gate to Source Cut-off Voltage

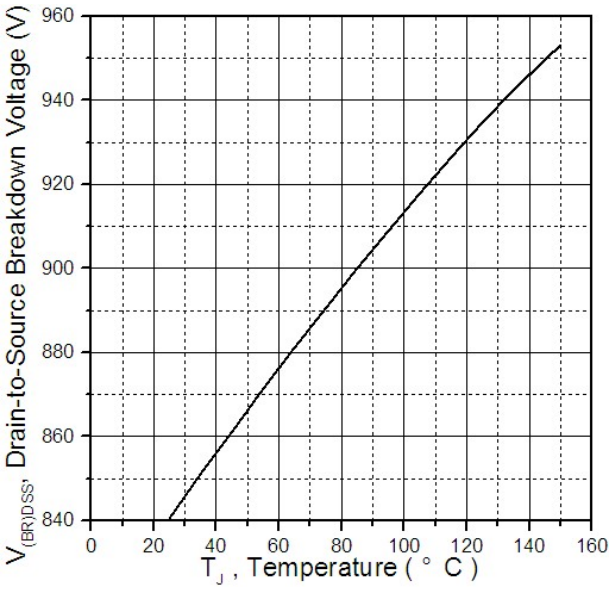

Figure 3. Drain-to-Source Breakdown Voltage Vs. Junction Temperature.

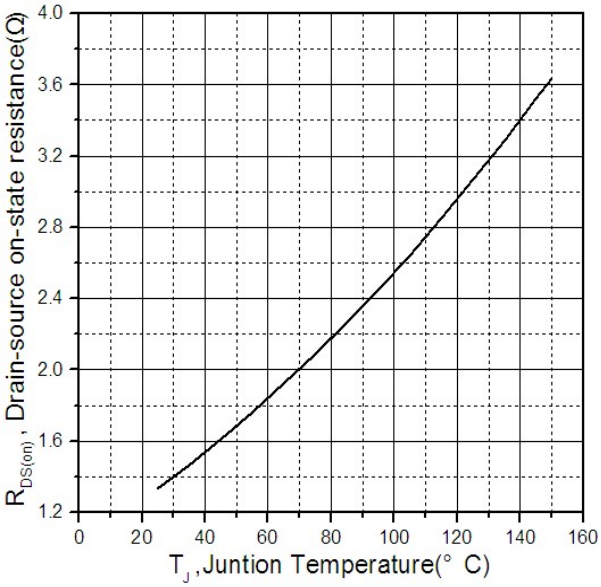

Figure 4. Normalized On-Resistance Vs. Junction Temperature

Typical Electrical and Thermal Characteristic Curves

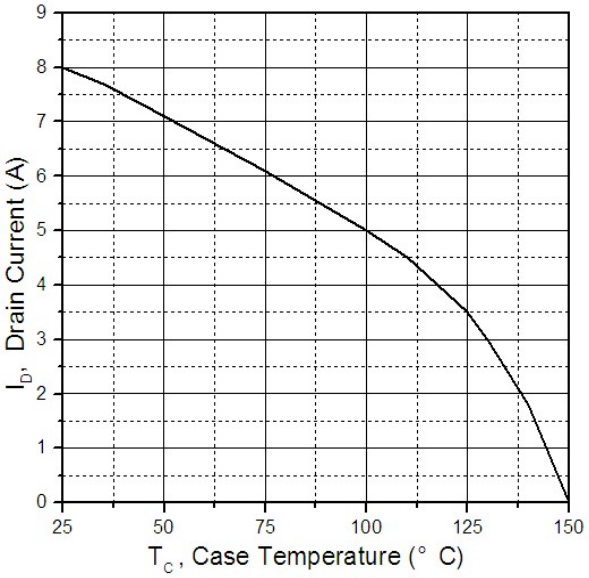

Figure 5. Maximum Drain Current Vs. Case Temperature

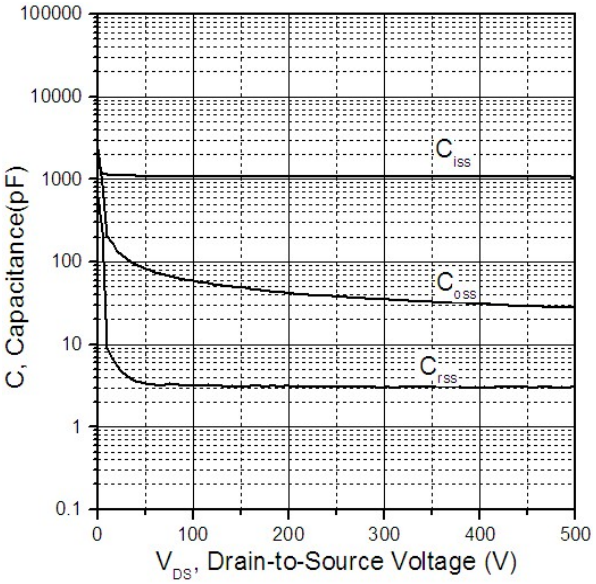

Figure 6. Typical Capacitance Vs. Drain-to- Source Voltage

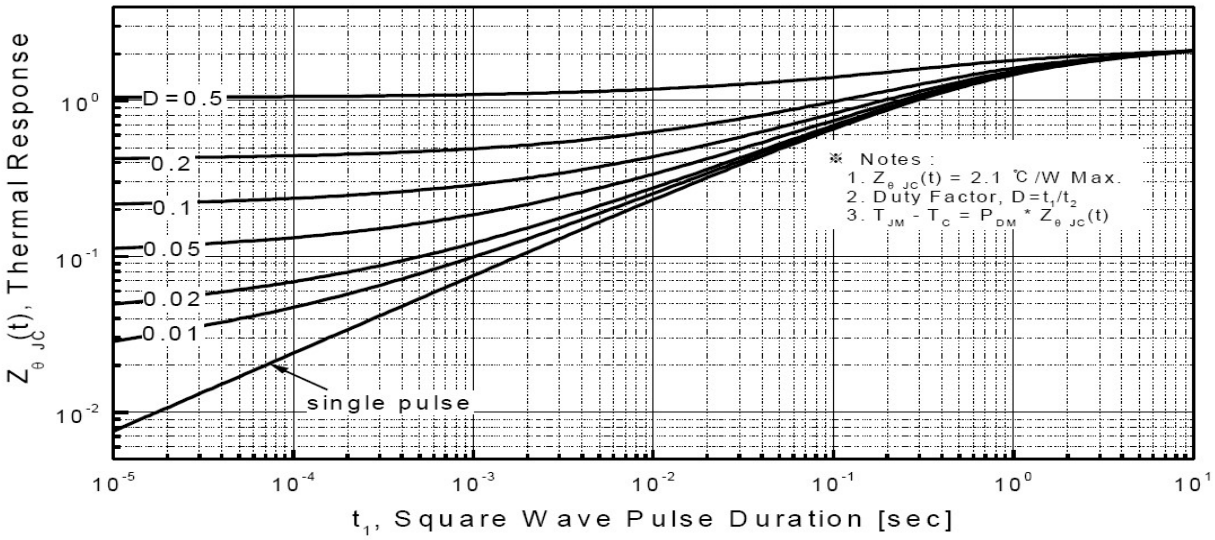

Figure 7. Maximum Effective Transient Thermal Impedance, Junction-to-Case

Test Circuit & Waveform

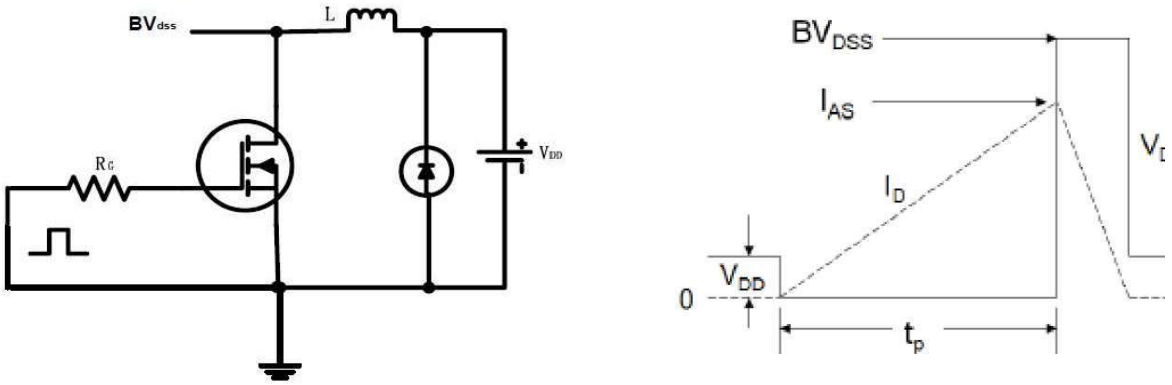

Figure 8. Unclamped Inductive Switching Test Circuit & Waveforms

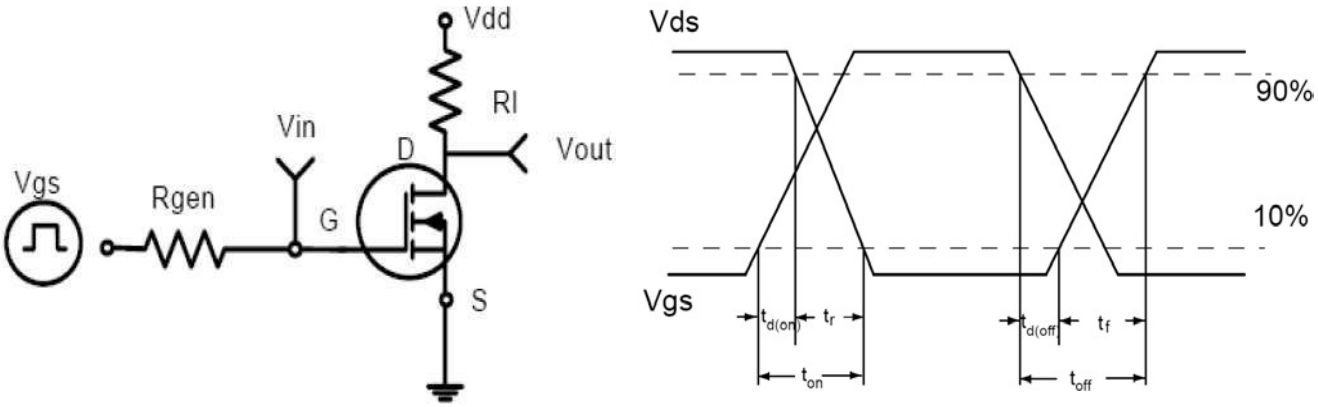

Figure 9. Resistive Switching Test Circuit & Waveforms

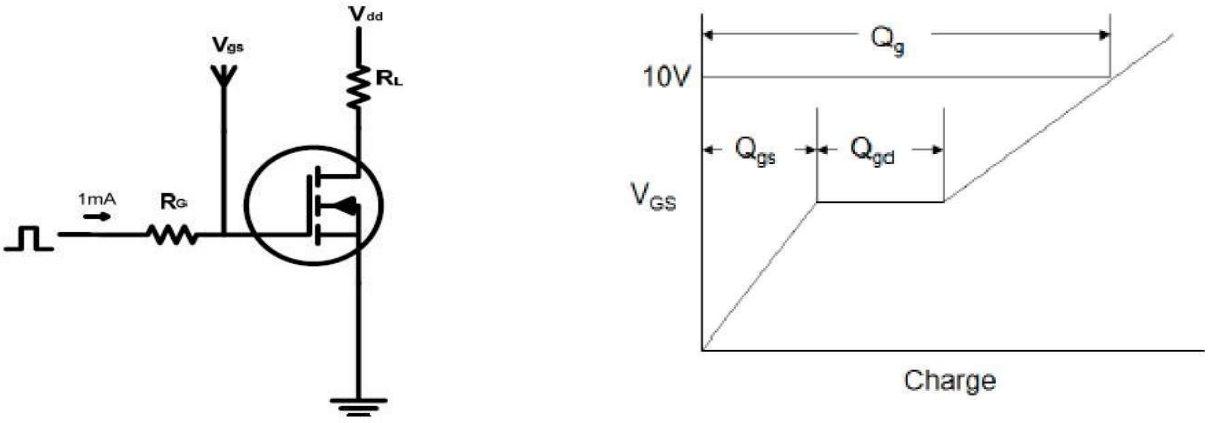

Figure 10. Gate Charge Test Circuit & Waveform

Package Outline Dimensions TO-220F

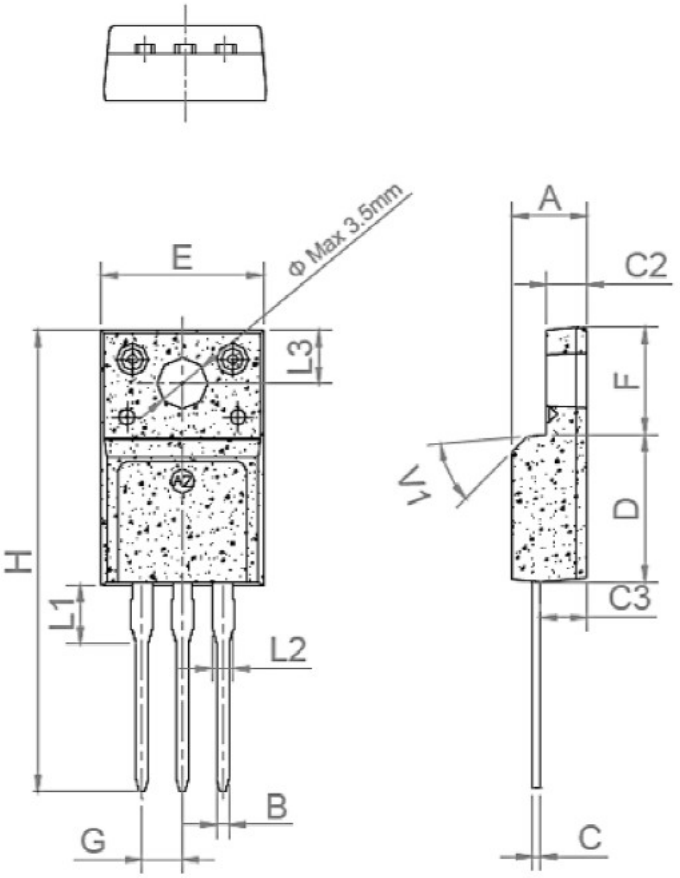

Ref.	Dimensions					
	Millimeters			Inches		
	Min.	Typ.	Max.	Min.	Typ.	Max.
A	4.50		4.90	0.177		0.193
B	0.74	0.80	0.83	0.029	0.031	0.033
C	0.47		0.65	0.019		0.026
C2	2.45		2.75	0.096		0.108
C3	2.60		3.00	0.102		0.118
D	8.80		9.30	0.346		0.366
E	9.80		10.4	0.386		0.410
F	6.40		6.80	0.252		0.268
G		2.54			0.1	
H	28.0		29.8	1.102		1.173
L1		3.63			0.143	
L2	1.14		1.70	0.045		0.067
L3		3.30			0.130	
V1		45°			45°	