GOOD-ARK SEMICONDUCTOR

GSFQ4812

40V Dual N-Channel MOSFET

Main Product Characteristics

$V_{(BR)DSS}$	40V
$R_{DS(ON)}$	28mΩ
I_D	8.5A

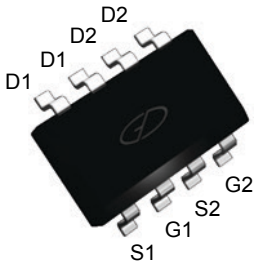

SOP-8

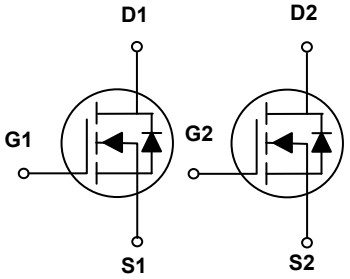

Schematic Diagram

Features and Benefits

- Advanced MOSFET process technology
- Ideal for high efficiency switched mode power supplies
- Low on-resistance with low gate charge
- Fast switching and reverse body recovery

Description

The GSFQ4812 utilizes the latest techniques to achieve high cell density and low on-resistance. These features make this device extremely efficient and reliable for use in high efficiency switch mode power supply and a wide variety of other applications.

Absolute Maximum Ratings (T_C=25°C unless otherwise specified)

Parameter	Symbol	Rating	Unit
Drain-Source Voltage	V_{DS}	40	V
Gate-Source Voltage	V_{GS}	±20	V
Drain Current – Continuous (T_C=25°C)	I_D	8.5	A
Drain Current – Continuous (T_C=100°C)		5	A
Drain Current – Pulsed[1]	I_{DM}	34	A
Single Pulse Avalanche Energy[2]	E_{AS}	14	mJ
Single Pulse Avalanched Current[2]	I_{AS}	17	A
Power Dissipation (T_C=25°C)	P_D	3.7	W
Power Dissipation – Derate above 25°C		0.029	W/°C
Storage Temperature Range	T_{STG}	-55 to +150	°C
Operating Junction Temperature Range	T_J	-55 to +150	°C

Thermal Characteristics

Parameter	Symbol	Typ.	Max.	Unit
Thermal Resistance Junction to Ambient	$R_{\theta JA}$	---	60	°C/W

Electrical Characteristics (T_J=25°C unless otherwise specified)

Parameter	Symbol	Conditions	Min.	Typ.	Max.	Unit
Off Characteristics						
Drain-Source Breakdown Voltage	BV_{DSS}	V_{GS}=0V, I_D=250uA	40	---	---	V
Drain-Source Leakage Current	I_{DSS}	V_{DS}=40V, V_{GS}=0V, T_J=25°C	---	---	1	uA
		V_{DS}=32V, V_{GS}=0V, T_J=125°C	---	---	10	uA
Gate-Source Leakage Current	I_{GSS}	V_{GS}=±20V, V_{DS}=0V	---	---	±100	nA
On Characteristics						
Static Drain-Source On-Resistance[3]	$R_{DS(ON)}$	V_{GS}=10V, I_D=3A	---	22.6	28	mΩ
		V_{GS}=4.5V, I_D=2A	---	29	38	mΩ
Gate Threshold Voltage	$V_{GS(th)}$	V_{GS}=V_{DS}, I_D=250uA	1.2	1.5	2.5	V
Forward Transconductance	gfs	V_{DS}=10V, I_D=1A	---	3	---	S
Dynamic and Switching Characteristics						
Total Gate Charge[3, 4]	Q_g	V_{DS}=20V, V_{GS}=4.5V, I_D=5A	---	4.5	10	nC
Gate-Source Charge[3, 4]	Q_{gs}		---	1.5	2.4	
Gate-Drain Charge[3, 4]	Q_{gd}		---	1.9	5	
Turn-On Delay Time[3, 4]	$T_{d(on)}$	V_{DD}=20V, V_{GS}=4.5V, R_G=25Ω, I_D=1A	---	3.2	6	nS
Rise Time[3, 4]	T_r		---	8.6	16	
Turn-Off Delay Time[3, 4]	$T_{d(off)}$		---	18	36	
Fall Time[3, 4]	T_f		---	6	12	
Input Capacitance	C_{iss}	V_{DS}=25V, V_{GS}=0V, F=1MHz	---	420	800	pF
Output Capacitance	C_{oss}		---	65	120	
Reverse Transfer Capacitance	C_{rss}		---	40	80	
Gate Resistance	Rg	V_{GS}=0V, V_{DS}=0V, F=1MHz	---	1.2	2.4	Ω
Drain-Source Diode Characteristics and Maximum Ratings						
Continuous Source Current	I_S	V_G=V_D=0V, Force Current	---	---	8.5	A
Pulsed Source Current[3]	I_{SM}		---	---	17	A
Diode Forward Voltage[3]	V_{SD}	V_{GS}=0V, I_S=1A, T_J=25°C	---	---	1	V

Note:
1. Repetitive Rating: Pulsed width limited by maximum junction temperature.
2. V_{DD}=25V, V_{GS}=10V, L=0.1mH, I_{AS}=17A, Starting T_J=25°C
3. The data tested by pulsed, pulse width ≦ 300uS, duty cycle ≦ 2%.
4. Essentially independent of operating temperature.

Typical Electrical and Thermal Characteristic Curves

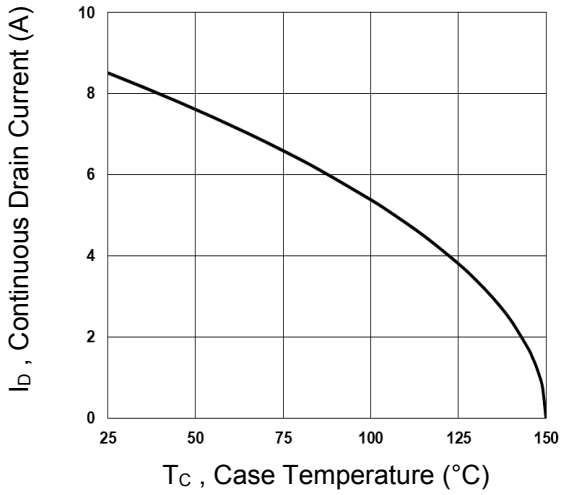

Fig.1 Continuous Drain Current vs. T_C

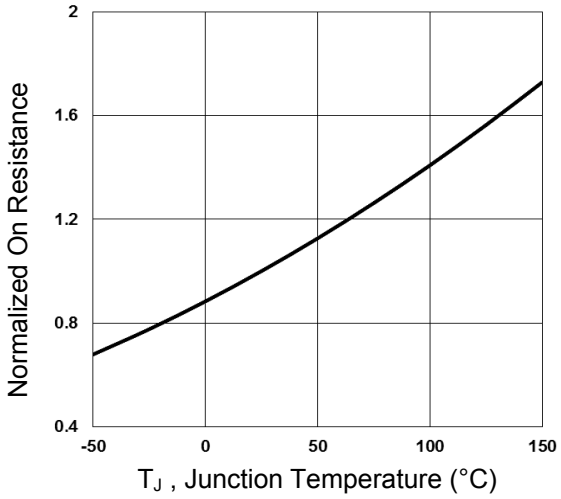

Fig.2 Normalized $R_{DS(ON)}$ vs. T_J

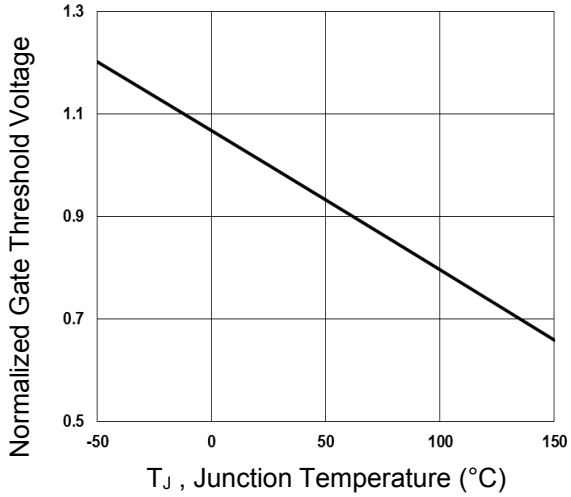

Fig.3 Normalized V_{th} vs. T_J

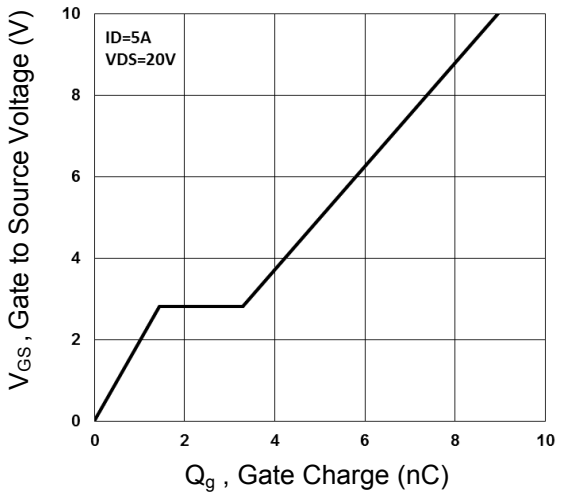

Fig.4 Gate Charge Waveform

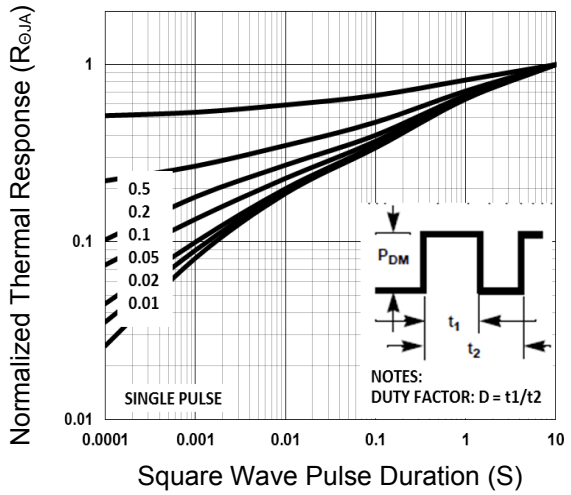

Fig.5 Normalized Transient Response

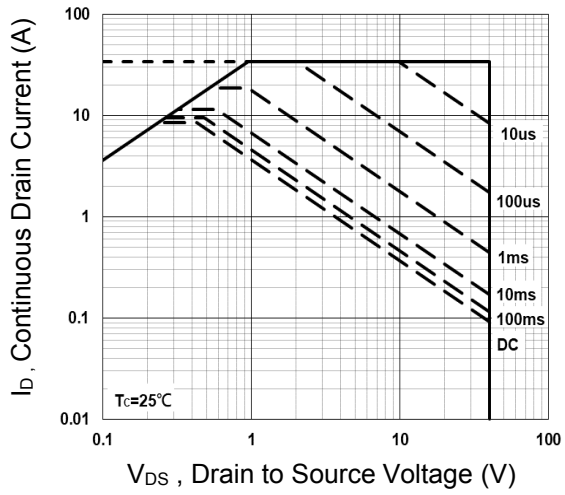

Fig.6 Maximum Safe Operation Area

Typical Electrical and Thermal Characteristic Curves

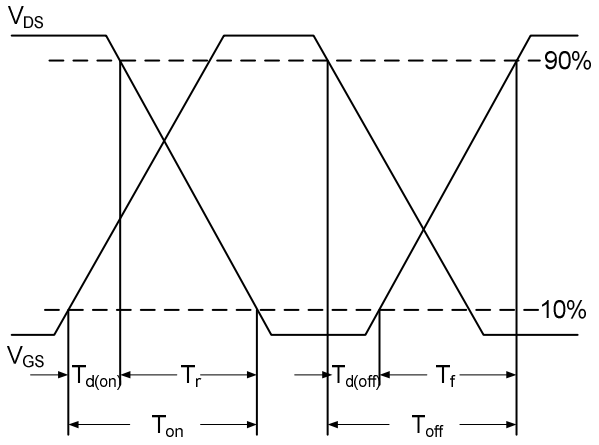

Fig.7 Switching Time Waveform

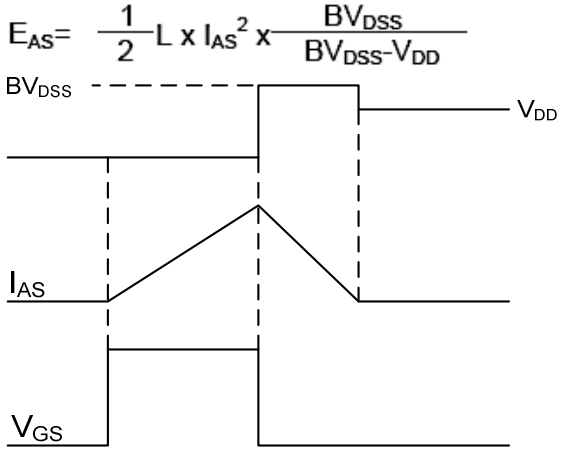

Fig.8 E_{AS} Waveform

Package Outline Dimensions SOP-8

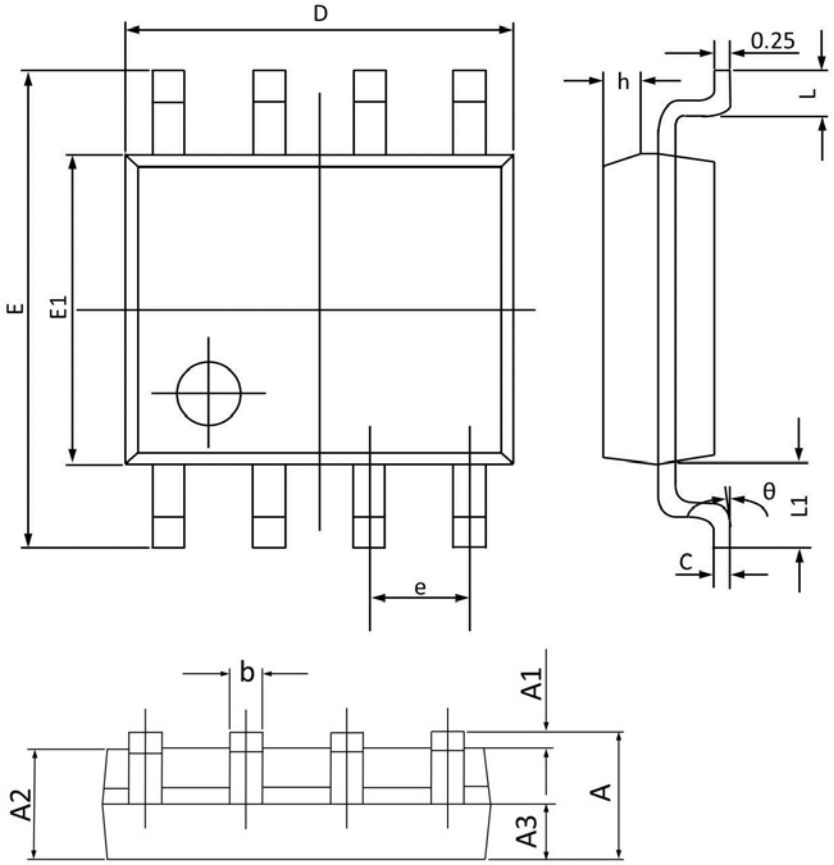

Symbol	Dimensions In Millimeters		Dimensions In Inches	
	Min	Max	Min	Max
A	1.350	1.750	0.053	0.069
A1	0.100	0.250	0.004	0.010
A2	1.250	1.650	0.049	0.065
A3	0.500	0.700	0.020	0.028
b	0.380	0.510	0.015	0.020
c	0.170	0.260	0.007	0.010
D	4.700	5.100	0.185	0.201
E	5.800	6.200	0.228	0.244
E1	3.700	4.100	0.146	0.161
e	1.270(BSC)		0.050(BSC)	
h	0.250	0.500	0.010	0.020
L	0.400	0.800	0.016	0.031
L1	1.050(BSC)		0.041(BSC)	
θ	0°	8°	0°	8°