GOOD-ARK SEMICONDUCTOR

GSF0102

100V N-Channel MOSFET

Main Product Characteristics

BV_{DSS}	100V
$R_{DS(ON)}$	240mΩ
I_D	2A

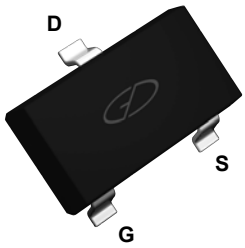

SOT-23

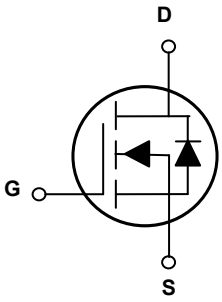

Schematic Diagram

Features and Benefits

- Advanced MOSFET process technology
- Ideal for high efficiency switched mode power supplies
- Low on-resistance with low gate charge
- Fast switching and reverse body recovery

Description

The GSF0102 utilizes the latest techniques to achieve high cell density and low on-resistance. These features make this device extremely efficient and reliable for use in high efficiency switch mode power supply and a wide variety of other applications.

Absolute Maximum Ratings (T_A=25°C unless otherwise specified)

Parameter	Symbol	Max.	Unit
Drain-Source Voltage	V_{DS}	100	V
Gate-Source Voltage	V_{GS}	±20	V
Drain Current-Continuous	I_D	2	A
Drain Current-Pulsed1	I_{DM}	5	A
Maximum Power Dissipation	P_D	1.25	W
Thermal Resistance, Junction-to-Ambient[2]	$R_{\theta JA}$	100	°C/W
Storage Temperature Range	T_{STG}	-55 To +150	°C
Operating Junction Temperature Range	T_J	-55 To +150	°C

Electrical Characteristics (T_A=25°C unless otherwise specified)

Parameter	Symbol	Conditions	Min.	Typ.	Max.	Unit
Off Characteristics						
Drain-Source Breakdown Voltage	BV_{DSS}	V_{GS}=0V, I_D=250μA	100	110	-	V
Zero Gate Voltage Drain Current	I_{DSS}	V_{DS}=100V , V_{GS}=0V	-	-	1	μA
Gate-Body Leakage Current	I_{GSS}	V_{GS}=±20V, V_{DS}=0V	-	-	±100	nA
On Characteristics[3]						
Static Drain-Source On-Resistance	$R_{DS(ON)}$	V_{GS}=10V, I_D=1A	-	210	240	mΩ
Gate Threshold Voltage	$V_{GS(th)}$	V_{DS}=V_{GS}, I_D=250μA	1.2	1.8	2.5	V
Forward Transconductance	g_{FS}	V_{DS}=5V, I_D=1A	1	-	-	S
Dynamic and Switching Characteristics[4]						
Total Gate Charge	Q_g	V_{DS}=50V, I_D=1.3A, V_{GS}=10V	-	5.2	-	nC
Gate-Source Charge	Q_{gs}		-	0.75	-	
Gate-Drain Charge	Q_{gd}		-	1.4	-	
Turn-On Delay Time	$t_{d(on)}$	V_{DD}=50V, R_L=39Ω V_{GS}=10V, I_D=1.3A, R_G=1Ω	-	6	-	nS
Turn-On Rise Time	t_r		-	10	-	
Turn-Off Delay Time	$t_{d(off)}$		-	10	-	
Turn-Off Fall Time	t_f		-	6	-	
Input Capacitance	C_{Iss}	V_{DS}=50V, V_{GS}=0V, F=1MHz	-	190	-	pF
Output Capacitance	C_{oss}		-	22	-	
Reverse Transfer Capacitance	C_{rss}		-	13	-	
Drain-Source Diode Characteristics						
Continuous Source Current[2]	I_S	-	-	-	2	A
Diode Forward Voltage[3]	V_{SD}	V_{GS}=0V, I_S=1.3A	-	-	1.2	V

Notes:

1. Repetitive Rating: Pulse width limited by maximum junction temperature.
2. Surface Mounted on FR4 Board, t ≤ 10 sec.
3. Pulse Test: Pulse Width ≤ 300μs, Duty Cycle ≤ 2%.
4. Guaranteed by design

Typical Electrical and Thermal Characteristic Curves

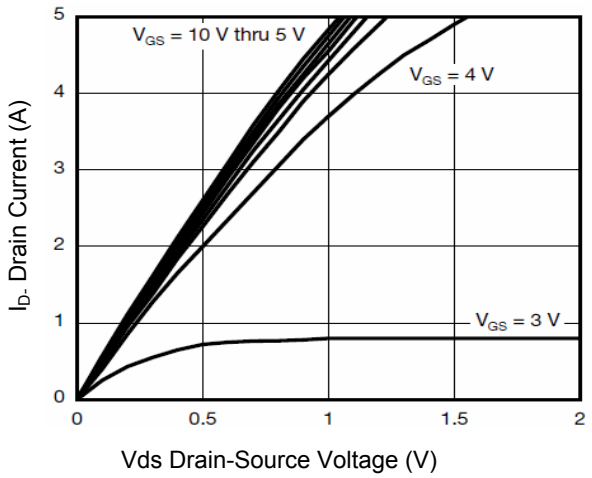

Figure 1. Output Characteristics

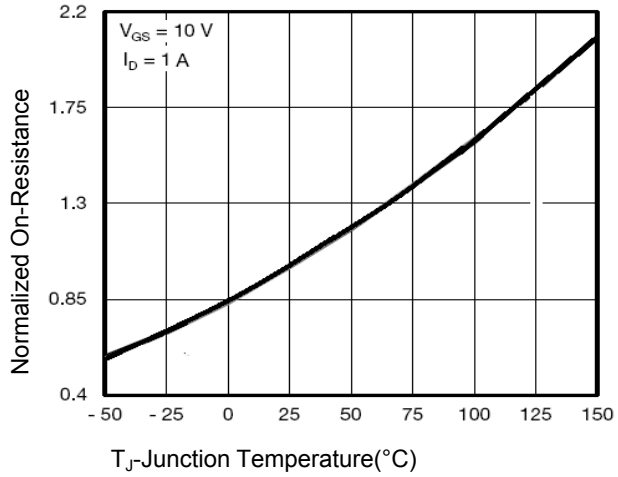

Figure 2. Rdson-JunctionTemperature

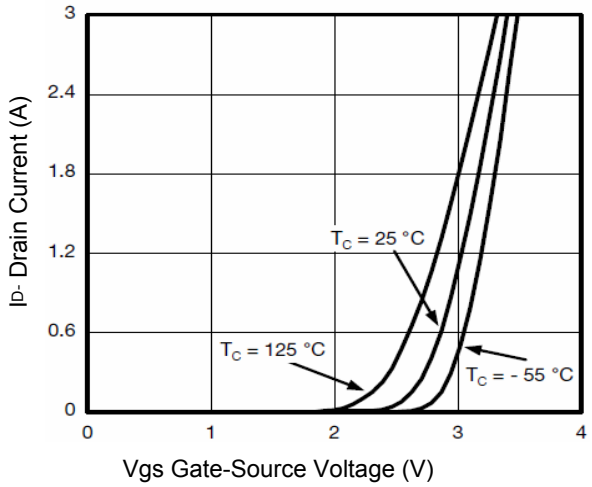

Figure 3. Transfer Characteristics

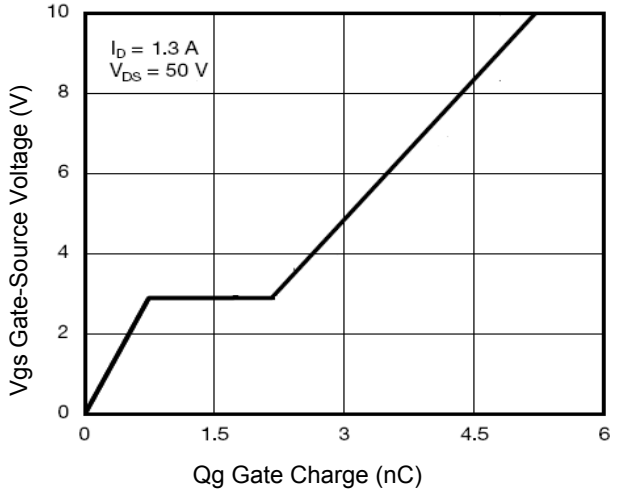

Figure 4. Gate Charge

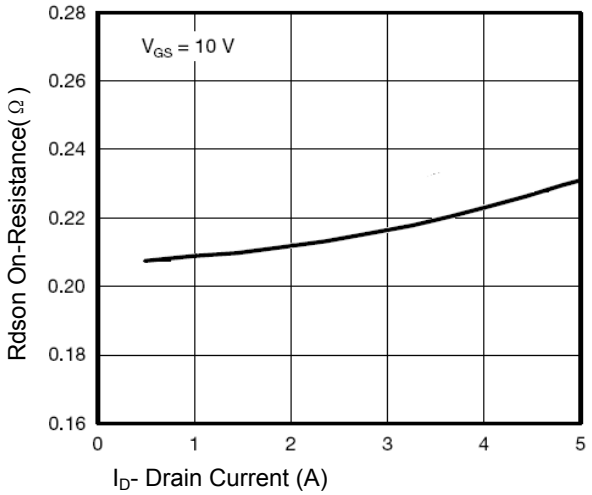

Figure 5. Rdson- Drain Current

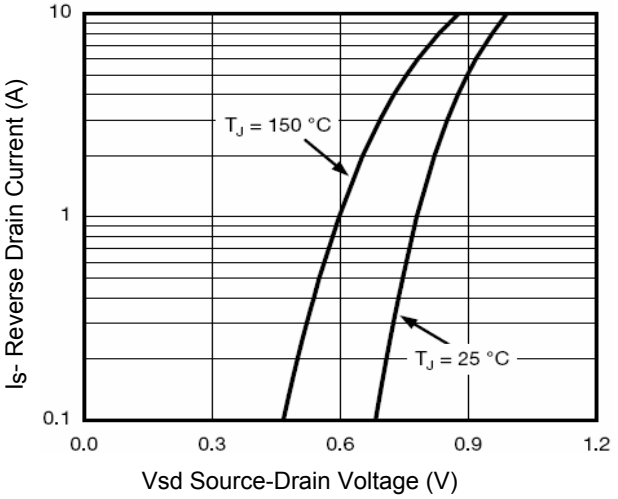

Figure 6 Source- Drain Diode Forward

Typical Electrical and Thermal Characteristic Curves

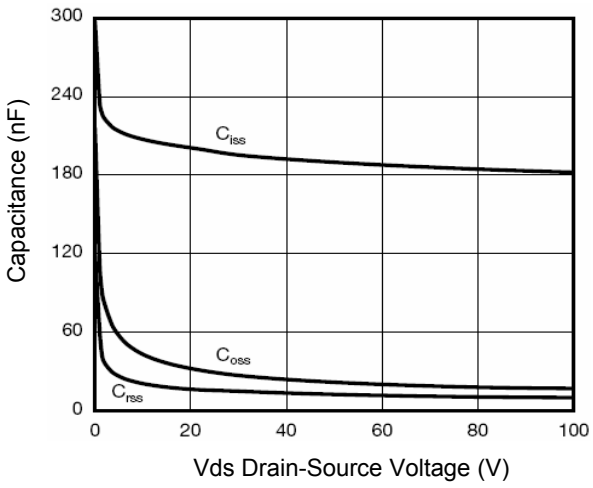

Figure 7. Capacitance vs Vds

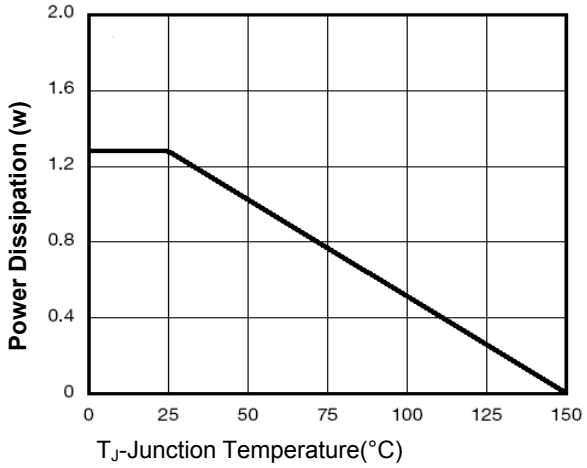

Figure 8. Power De-rating

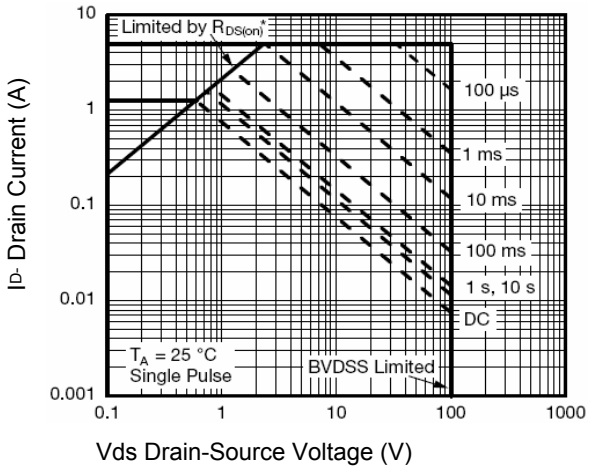

Figure 9. Safe Operation Area

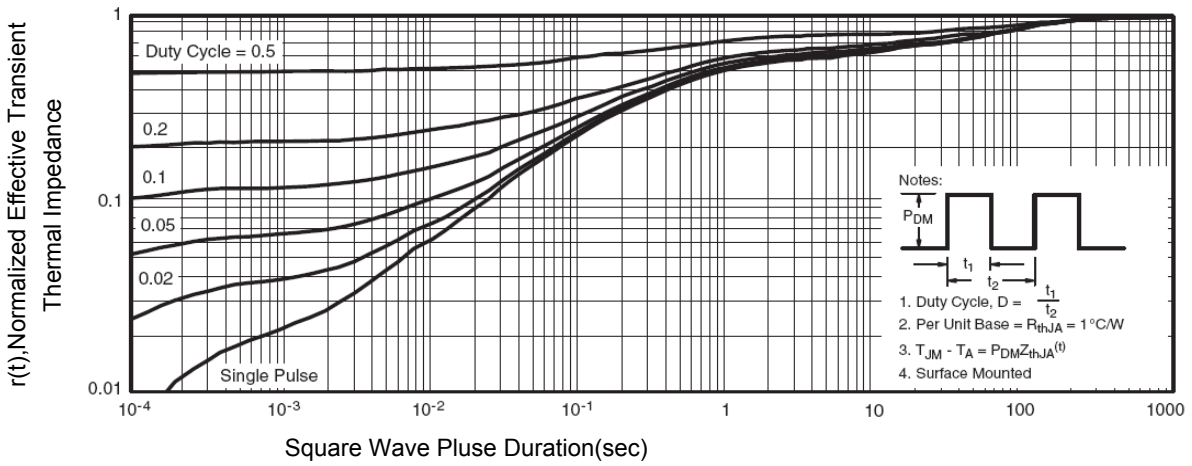

Figure 10. Normalized Maximum Transient Thermal Impedance

Typical Electrical and Thermal Characteristic Curves

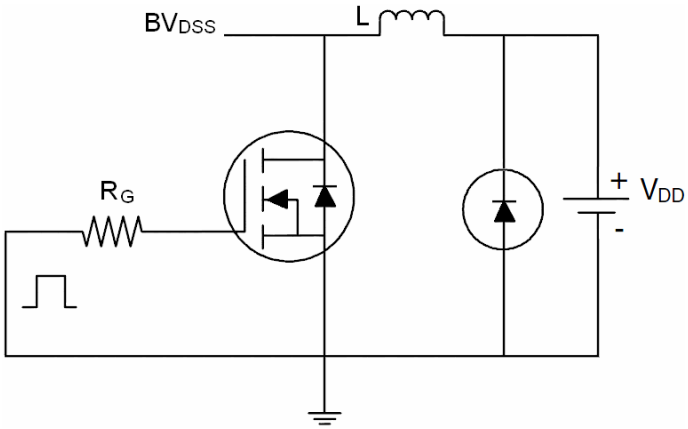

Figure 11. E_{AS} Test Circuit

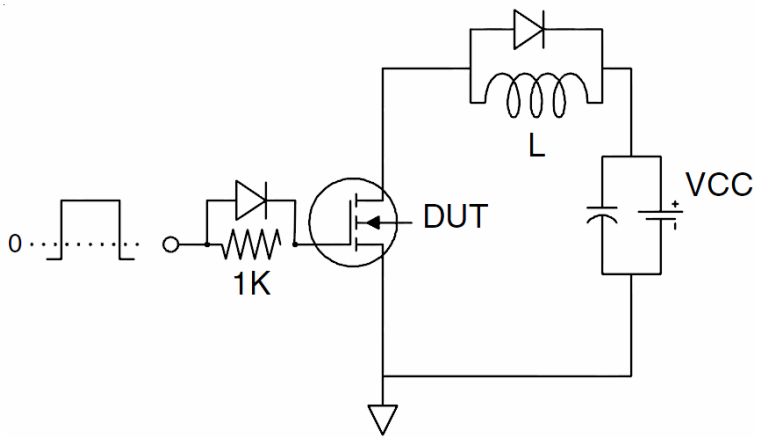

Figure 12. Gate Charge Test Circuit

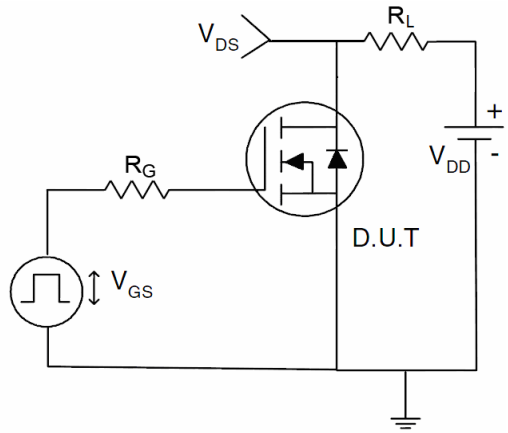

Figure 13. Switch Time Test Circuit

Package Outline Dimensions (SOT-23)

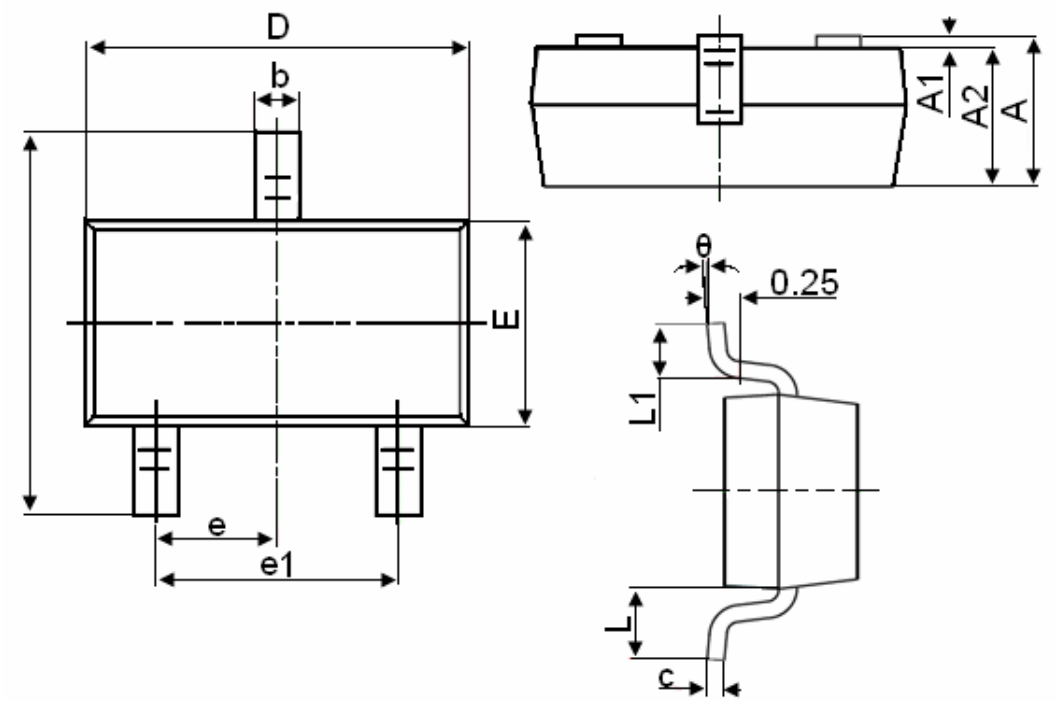

Symbol	Dimensions in Millimeters	
	MIN.	MAX.
A	0.900	1.150
A1	0.000	0.100
A2	0.900	1.050
b	0.300	0.500
c	0.080	0.150
D	2.800	3.000
E	1.200	1.400
E1	2.250	2.550
e	0.950TYP	
e1	1.800	2.000
L	0.550REF	
L1	0.300	0.500
θ	0°	8°

Notes

1. All dimensions are in millimeters.
2. Tolerance ±0.10mm (4 mil) unless otherwise specified
3. Package body sizes exclude mold flash and gate burrs. Mold flash at the non-lead sides should be less than 5 mils.
4. Dimension L is measured in gauge plane.